MONTAGUE SELECTBOARD MEETING

1 Avenue A, Turners Falls and VIA ZOOM
Monday, February 3, 2025
AGENDA
Join Zoom Meeting: https://us02web.zoom.us/j/84182270690

Meeting ID: 841 8227 0690 **Password:** 638550 **Dial into meeting:** **+1 646 558 8656**

This meeting/hearing of the Selectboard will be held in person at the location provided on this notice. Members of the public are welcome to attend this meeting. Please note that while an option for remote attendance and/or participation is being provided as a courtesy to the public, the meeting/hearing will not be suspended or terminated if technological problems interrupt the virtual broadcast, unless otherwise required by law. Members of the public with particular interest in any specific item on this agenda should make plans for in-person vs. virtual attendance accordingly.

Topics may start earlier than specified, unless there is a hearing scheduled

Meeting Being Taped **Votes May Be Taken**

1. 6:30PM Selectboard Chair opens the meeting, including announcing that the meeting is being recorded and roll call taken

2. 6:30 Approve Minutes: Selectboard Meeting, January 13, 2025

3. 6:32 **Public Comment Period:** Individuals will be limited to two (2) minutes each and the Selectboard will strictly adhere to time allotted for public comment

4. 6:35 **Maureen Pollock, Planning Director**
   - Announce receipt of FY25 MassDOT Complete Streets Tier 3 construction grant of $499,682 - Traffic Calming and Bicycle & Pedestrian Improvements in Montague Center. Next steps
   - Montague Seeks Community Input on Climate-Resilience Seed Project Concepts.
   - Authorization request to apply for Mass Trails Grant Application– Conduct a feasibility study that explores possible connectivity through the Montague Plains with connections to the surrounding 5 villages, the DCR Canalside Rail Trail, and Franklin County Bikeway

5. 6:45 **Jessica Strom, COO, Community Health Center of Franklin County**
   - Request for license to place directional sign in the public right of way at corner of Burnham St and Montague City Road

6. 7:00 **Public Works Superintendent, Sam Urkiel**
   - DPW Discretionary Account authorization request - $30,000 for tack tank trailer
   - Sewer Collection System updates

7. 7:10 **FY26 Budget Review with Town Administrator and Town Treasurer**
   - Discuss Hampshire County Group Insurance Trust's plan to increase employee health insurance rates by 18-20% in FY26
   - Review budget and identify information gaps
   - Next steps in budget development process
   - Vote recommendations on draft FY26 budget

8. 7:30 **Assistant Town Administrator's Business**
   - Budget review for charging stations (electricity, network fees)
   - Request for authorization to apply for no-cost EV charging planning support and feasibility studies from Massachusetts Clean Energy Center
   - Discussion on Colle Building strategy for proposals
   - Authorize Notice to Proceed with National Water Main Cleaning Co for Turners Falls Sewer Manhole Rehabilitation
   - Preliminary discussion on regional Emergency Medical Services (EMS)
   - Other project updates

9. 7:45 **Town Administrator's Business**
   - Opioid Settlement funding spending strategy update
   - Topics not anticipated within 48 hour posting requirements

10. 7:50 Executive Session with Board of Assessors in accordance with G.L. c. 30A, § 21 (3) To discuss strategy with respect to litigation with FirstLight Power, Inc. if an open meeting may have a detrimental effect on the litigating position of the public body and the chair so declares.

11. 8:30 Executive session in accordance with G.L. c.30A, §21(a)(3) to discuss strategy with respect to collective bargaining relating to National Association of Government Employees (NAGE), United Electrical Workers (UEW), and New England Police Benevolent Association (NEPBA) locals if an open meeting may have a detrimental effect on the bargaining position of the public body and the chair so declares

Next Meetings:

- Selectboard and Finance Committee GMRSD Budget Hearing, Wednesday, February 5, 2025, at 5:30 PM, Montague Town Hall Second Floor Conference Room
- Selectboard, Monday, February 10, 2025, at 6:00 PM, via ZOOM

TOWN OF
MONTAGUE
MASSACHUSETTS

TOWN HALL
One Avenue A
Turners Falls, MA 01376

DEPARTMENT OF PLANNING & CONSERVATION
(413) 863-3200 ext. 112
Planner@montague-ma.gov

MEMORANDUM

TO: **Selectboard**
Walter Ramsey, Town Administrator
Chris Nolan, Assistant Town Administrator
Samuel Guerin, DPW Superintendent
FROM: **Maureen Pollock, Planning Director**
RE: **Montague Awarded a $500K MassDOT Construction Grant for Traffic Calming and Bicycle & Pedestrian Improvements in Montague Center**
DATE: **January 29, 2025**

The Town of Montague has been awarded a $499,682 MassDOT FY25 Complete Streets Tier 3 construction grant (round 2) for traffic calming measures and bicycle & pedestrian improvements in the Montague Center village center. The project was identified in the Town's 2018 Complete Streets Prioritization Plan, and echoed by residents and other stakeholders during community engagement efforts provided by the Town in the summer/fall of 2024.

"The primary goal of this project is to lower traffic speeds through the village of Montague Center and to improve pedestrian and cyclist safety." Planning Director Maureen Pollock stated. "The inter-department collaboration between the Town's Planning Department, DPW, and the Selectboard's Office, and, robust community engagement, really made this project application shine and helped us get this grant."

Town Administrator Walter Ramsey stated, "Montague has been committed to MassDOT's Complete Streets program since 2017 to make Town roads safer for people of all ages and abilities and all modes of travel. This program is a key funding source that allows Montague to provide these improvements."
DPW Superintendent Samuel Urkiel stated, "the Town looks forward to providing safety improvements to Montague Center, which will result in much better conditions for all users - driving, on foot, or pedaling."

In 2017, the Town adopted a Complete Street Policy. With the assistance of the Franklin Regional Council of Governments, the Town prepared its Complete Streets Prioritization Plan in 2018, identifying 41 priority projects across town.

"Since its adoption, the Town has received $710,000 in Tier 3 construction funding and has completed projects such as sidewalk and crosswalk improvements, installation of rapid flashing beacons at crosswalks, and dedicated bike lanes. This latest award will bring investment in infrastructure improvements to over $1.2M," Ramsey stated.

The FY25 award will provide construction funds for the following improvements:

<u>Pedestrian crossing improvements</u>:

- Replace existing crosswalks on Main Street at School Street and Union Street with raised crosswalks and advanced signage. Provide flashing beacons (RRFBs) at the Union Street crosswalk.

- Provide vegetative traffic island with proposed granite at North/Main Street to reduce the road width and provide refuge for pedestrian crossing.
- Extend the common apex at the Main Street/Center Street intersection, install a new crosswalk with pedestrian ramps and flashing beacons (RRFBs), which will provide access to the Town Common.
- Redefine the intersection of Main Street at North Street and provide new crosswalks and access to the common.
- Replace crosswalks and pedestrian ramps at the Center Street and North Street intersection, so they meet ADA accessibility

ADA accessibility improvements at FRTA Bus Stops:

- Provide a concrete pad and transition sidewalk at the existing northbound bus stop in front of the US Post Office.
- Remove the southbound bus stop and shelter in front of the Village Store and install a cut out to allow for an on-street vehicle parking space.
- Relocate the southbound bus stop on Main Street at the Main/Union Street intersection and provide a concrete pad, and transition sidewalk.
- *In partnership with FRTA, the Town will provide a new bus shelter and bike rack at each bus stop location.

Bicycle accommodations:

- Restripe Main Street from North Street to Station Street to provide buffered 5-foot-wide bike lanes and a wide shoulder area that can be used for on-street parking.
- Restripe Main Street from Station Street to Main/South Street intersection to provide 5-foot-wide bike lanes. In areas of on-street parking they will have a 3-foot buffer from parked vehicles.
- Redefine Pavement Markings on Center Street to accommodate shoulder areas for bicycle use or on street parking.

In the winter/spring of 2025, the Town will prepare final designs and bid ready documents for Selectboard review/approval before soliciting contractors to perform the work. As part of this process, the Town will continue its community engagement and public outreach efforts. More info to come!

Enclosed you may find MassDOT's award letter, dated January 14, 2025.

For more info about the MassDOT Complete Streets Funding Program, click HERE
For more info about Montague's Complete Streets Program, click HERE.
For more info about the Montague Center Complete Streets Project, click HERE.

For questions/comments, please contact the Montague Planning Department at planner@montague-ma.gov or (413) 863-3200 x112.

###

Maura Healey, Governor
Kimberley Driscoll, Lieutenant Governor
Monica Tibbits-Nutt, Secretary & CEO
Jonathan L. Gulliver, Highway Administrator

mass DOT15 Highway

January 14, 2025

Maureen Pollock
Town Planner
1 Avenue A
Montague, MA 01376

Via email: mpollock@montague-ma.gov

Dear Maureen Pollock:

Thank you for your Tier 3 submission to the Compete Streets Funding Program during Round 2 of the Fiscal Year 2025 application solicitation. We received many applications and had a very competitive application pool from which to select. I am pleased to notify you that Montague's application has been approved for $499,682.80.

Awarded municipalities will enter into a contract with MassDOT for the completion of approved work. A member of the Community Grants Group will reach out shortly to gather all necessary information to begin the contracting process. It is anticipated that the Notice to Proceed (NTP) will be issued by April 1, 2025, and the deadline for construction will be December 31, 2026. MassDOT-funded work may not proceed until the NTP is issued.

Please note that as detailed in the Program Guidance, design is not an eligible grant cost. Design work for this project may begin at any time and must be completed by a MassDOT Prequalified Contractor. Construction funds awarded through this program are paid via the reimbursement of approved costs. Reimbursement requests are processed by your District State Aid Engineer in the same manner as Chapter 90 projects on Grant Central.

Please email CompleteStreetsProgram@dot.state.ma.us with questions related to this award. Thank you for your commitment to improving safety, access, and mobility for all roadway users in your community and for your participation in the Complete Streets Funding Program. MassDOT looks forward to working with you on this important project.

Sincerely,

Jonathan L. Gulliver
Highway Administrator

cc: Kristen Rebelo, MassDOT Community Grants Program Administrator
Patricia Leavenworth, MassDOT District 2 Highway Director
Walter Ramsey, Montague Town Administrator

TOWN OF
MONTAGUE
MASSACHUSETTS

TOWN HALL
One Avenue A
Turners Falls, MA 01376

DEPARTMENT OF PLANNING & CONSERVATION
(413) 863-3200 ext. 112
Planner@montague-ma.gov

MEMORANDUM

TO: **Selectboard**
FROM: **Maureen Pollock, Planning Director**
Montague MVP 2.0 Core Team
RE: **Montague Seeks Community Input on Climate-Resilience Seed Project Concepts**
DATE: **January 30, 2025**

FOR IMMEDIATE RELEASE

Town of Montague Seeks Community Input on Climate-Resilience Seed Project Concepts

Montague, MA – As part of the Town of Montague's participation in the Massachusetts Municipal Vulnerability Preparedness (MVP) 2.0 Planning Process, the Town has $50,000 to spend on a 12-month climate-resilience "seed" project. The funding is intended to jump-start or advance the updated community resilience priorities that were identified through the 2.0 Process over the past year.

Over the summer, the Montague MVP 2.0 Core Team—a project team composed of residents, liaisons from community organizations, and municipal employees—surveyed and interviewed residents to uncover the root causes of social vulnerability and sources of social resilience in Montague. From the extensive feedback received, the Core Team developed an updated list of resilience priorities for the Town of Montague. In the fall, the Core Team finalized resilience priorities based on public feedback gathered at an English-language community meeting at the Shea Theater, a Spanish-language community meeting at the HeartWing Center (formerly known as Montague Catholic Social Ministries), and surveys circulated at gathering places like the Senior Center and community meals site in town. Of 20 resilience priorities identified by the Core Team, three top priorities related to food access and home energy efficiency were selected as the focus for project development.

After careful consideration, the Core Team has identified three potential projects for funding. To ensure that the selected project best meets the needs of the community, the Town is inviting residents to provide their input by participating in a survey.

Project Concepts:

- **Project A**: **Improve and expand community gardens in Montague**
- **Project B**: **Support the development of a community/commercial kitchen at the Finders Collective community space in Turners Falls**
- **Project C**: **Pilot a winter window insert community building program**

The Town of Montague values community input and encourages all residents to participate in shaping the future of local climate resilience efforts. Residents are encouraged to rank these projects based on their potential benefits to the community and provide feedback on what is necessary to maximize their benefit, particularly for those in the community most vulnerable to climate change. Residents with life circumstances that may experience increased overall vulnerability — such as older residents and youth, renters, unhoused residents, low-income residents, households that speak a language other than English at

home, residents of color, residents with experience of substance abuse issues, LGBTQ residents, residents with a disability, caretakers and neurodivergent residents — are particularly encouraged to take the survey.

How to Participate:

- **Survey Response Deadline:** 11:59pm on Wednesday, February 19, 2025
- **Survey Options:**
  - Complete the survey online at www.surveymonkey.com/r/seedprojects
  - Find and return a printed survey to the Montague Town Hall Planning Department, 1 Avenue A, Turners Falls

To learn more about Montague's MVP 2.0 Core Team, planning process, and resilience priorities, visit https://montague-ma.gov/p/1554/Municipal-Preparedness-Vulnerability-MVP-20-Core-Team

For questions/comments, please contact:

Maureen Pollock
Town of Montague Planning Director
(413) 863-3200 ext. 112
mpollock@montague-ma.gov

###

TOWN OF
MONTAGUE
MASSACHUSETTS

TOWN HALL
One Avenue A
Turners Falls, MA 01376

DEPARTMENT OF PLANNING & CONSERVATION
(413) 863-3200 ext. 112
Planner@montague-ma.gov

MEMORANDUM

TO: **Selectboard**
FROM: **Maureen Pollock, Planning Director**
RE: **Authorization request to apply for MassTrails Grant Application– Conduct a feasibility study that explores possible connectivity through the Montague Plains with connections to the surrounding 5 villages, the DCR Canalside Rail Trail, and Franklin County Bikeway.**
DATE: **January 29, 2025**

The Planning Department respectfully request authorization to apply for the 2025 MassTrails Grant Application to conduct a feasibility study that explores possible pedestrian/bicycle connectivity through the Montague Plains (via Town right-of-ways) with connections to the surrounding 5 villages, the DCR Canalside Rail Trail, and Franklin County Bikeway.

The feasibility study would include community engagement, mapping, and preliminary conceptual designs, including: ADA accessibility and environmental constraints.

The total grant request to MassTrails is $34,200.00 with a 20% local match, provided through Planning Department staff time. If awarded, the Town will solicit a qualified consultant to assist with this project scope. The project duration would be ~12 months, likely starting in the winter 2026.

This possible network plays a critical role of connecting residents with essential services and employment opportunities. It also contributes to public health, tourism, and an overall sense of community through its pedestrian and bicycle networks.

As part of the planning process and community engagement for updating the Town's Comprehensive Plan, Montague residents expressed interest in examining the feasibility of creating a multi-use trail connecting all 5 villages. This project is identified as a possible transportation strategy in the adopted 2024 Comprehensive Plan (PDF page 70 of 84).

Board of Selectmen
TOWN OF MONTAGUE

ONE AVENUE A
TURNERS FALLS, MA 01376
TEL: (413) 863-3204
FAX: (413) 863-3210

License to Place Directional/Informational Sign in the Public Right-of-Way

Applicant Name Jessica Strom Business Name Community Health Center of Franklin Co.

Address 8 Burnham St Turners Falls Phone 413-325-8500

Description of Sign (size,materials) 96"x38" Aluminum

Location of Sign Placement Corner of Burnham St & Montague City Rd

Duration of Sign Placement: Indefinite

The licensee shall be exclusively responsible for any injury or damage sustained by a user of the public right-of-way caused by the placement of any licensed sign by the applicant. The Town and the Board of Selectmen shall be held harmless in the event of such an occurrence.

Jessica Strom Date 12/3/24
Applicant Signature

General
- To qualify for this license the sign shall: a) be classified either as "miscellaneous", "temporary", or "portable' per the Massachusetts State Building Code: and b) comply with all relevant sections of the same Code.
- No sign shall be placed in the travel way.
- No sign shall be placed so as to obstruct or hinder pedestrian traffic.
- No sign shall be placed so as to block or obstruct the sight-line of vehicular traffic.
- Signs shall not be lighted.

Size & Content
- Sign shall be limited to two (2) square feet in size.

Exceptions
- Signs which do not meet the above requirements may be allowed by the Board of Selectmen after review at a public meeting.

Term of License
- This license is renewable on an annual basis.
- The sign may be ordered removed by the Board of Selectmen or its designee for failure to comply with these license requirements.

I have read and agree to comply with the above regulations relating to this license agreement.

JS
Applicant's Initials

Approved:

Date
Chairman, Board of Selectmen

Form (file: dirsign.lic)

Outlook

CHCFC moving in to Burnham Street property - request for special signage

From Jessica Strom <jessica.strom@chcfc.org>
Date Thu 11/14/2024 11:24 AM
To Walter Ramsey <WalterR@montague-ma.gov>

Good morning Mr. Ramsey,

I'm not sure if you are aware of this already but the Community Health Center of Franklin County will be opening for health care services on December 2nd. We renovated the building at 8 Burnham Street, formerly owned by Baystate Health and before that Connecticut River Internists. We are excited to return to Turners Falls as it was our starting place back in 1997! Medical services began first, followed by Dental a few years later, located in the Farren. Medical had moved out years before my time (I started in 2015), and then Dental moved out in 2018 when we opened our new Main Street site in Greenfield. So it's been over 6 years since our last home in Turners!

We would love to meet with you and tell you more about our very specific model of care, as a Federally Qualified Health Center. You should also be receiving an invite to our open house which is coming up quickly! Hopefully you can make it to that but if not, or even in addition to that, we'd love to invite you over to see the space and get to know each other! If you have some days or times this would be convenient for you please let me know. I know that the holiday season can be hectic, so happy to look towards after the new year too.

I wanted to check with you about the possibility of using town land down on the Montague Road side to put up our signage (asking for special permission as I am aware that zoning rules say that signage can only be on our property). We are just hoping for a little more visibility and think that location would be better. I did talk with Bill, the building inspector, and he let me know that the first step would be to get the towns permission to use town land, and then I would also have to appeal to the zoning board after that.

What do you think about the possibility of making this happen?

Jessica Strom
Chief Operations Officer
102 Main St
Greenfield, MA 01301
(413) 325-8500
www.chcfc.org

CHCFC
Community Health Center of Franklin County

CHCFC
Community Health Center of Franklin County

Parcel ID: 12-0-004
Zone: NB

8 Burnham Street
Turners Falls, MA

OFF-PREMESIS FREESTANDING SIGNAGE
LOW PROFILE, NON-ILLUMINATED ALUMINUM POST & PANEL SIGN

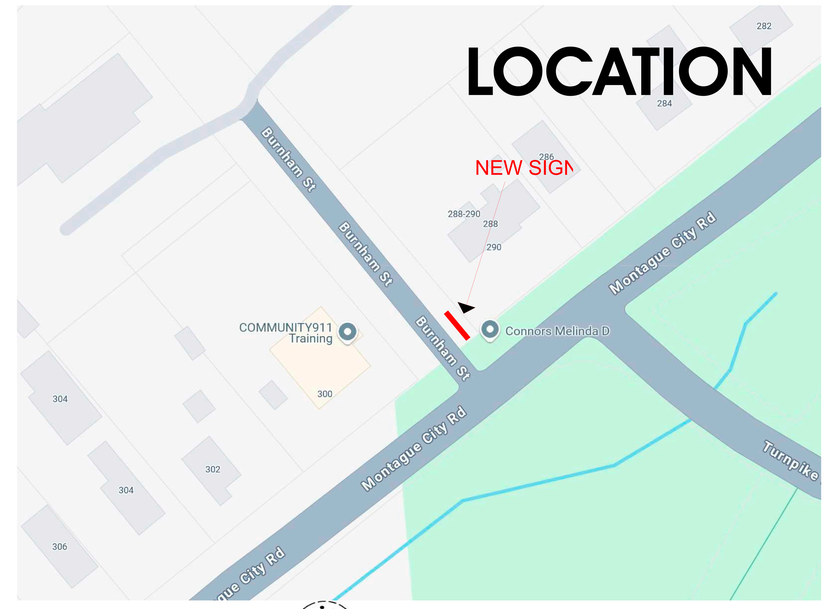

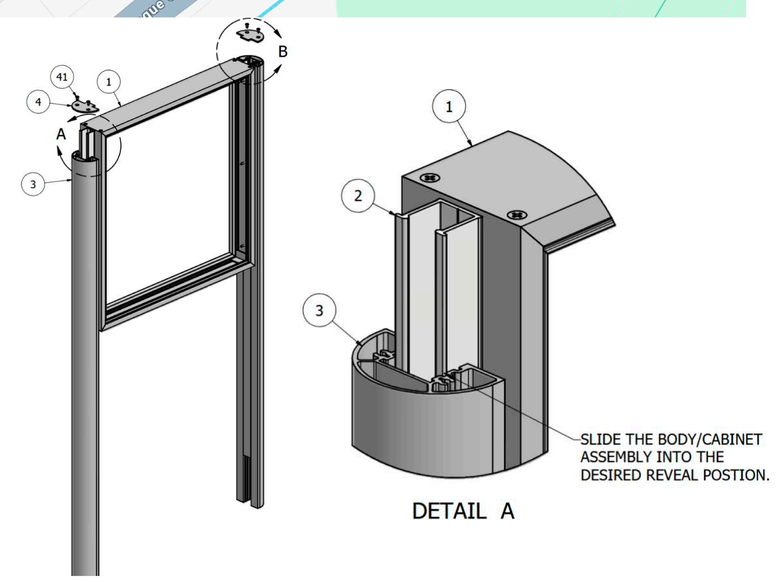

Authorized Signature: _____ Print Name: _____ Date: _____

ADD-A-SIGN SIGNS 1·978·466·9000

ADD-A-SIGN LLC
136 Pond Street
Leominster, MA 01453
978.466.9000 Fax: 978.537.0095
www.addasign.com

Scope of Work:
Install a 9' Wide X 3' Tall X 3.5" Deep Fabricated Sign Cabinet with Aluminum posts via direct burial with 4,000Lb test Cement.

Artwork Disclaimer: Due to the nature of the printing process, the colors represented in this proof are approximate and should be used solely for proofing purposes only. If actual colors or PMS colors are listed, it is recommended that you refer to a Pantone color guide for actual colors. All scales are approximate unless measurements are specifically shown. By signing this proof indicates that you approve of the colors and sizes and have verified such.

This design is the exclusive property of ADD-A-SIGN Co.. All rights reserved. Reproduction of this property without permission will be subject to the user liability under the copyright statutes of the United States.

CHCFC
Community Health Center of Franklin County

Parcel ID: 12-0-004
Zone: NB

8 Burnham Street
Turners Falls, MA

OFF-PREMESIS FREESTANDING SIGNAGE
LOW PROFILE, NON-ILLUMINATED ALUMINUM POST & PANEL SIGN

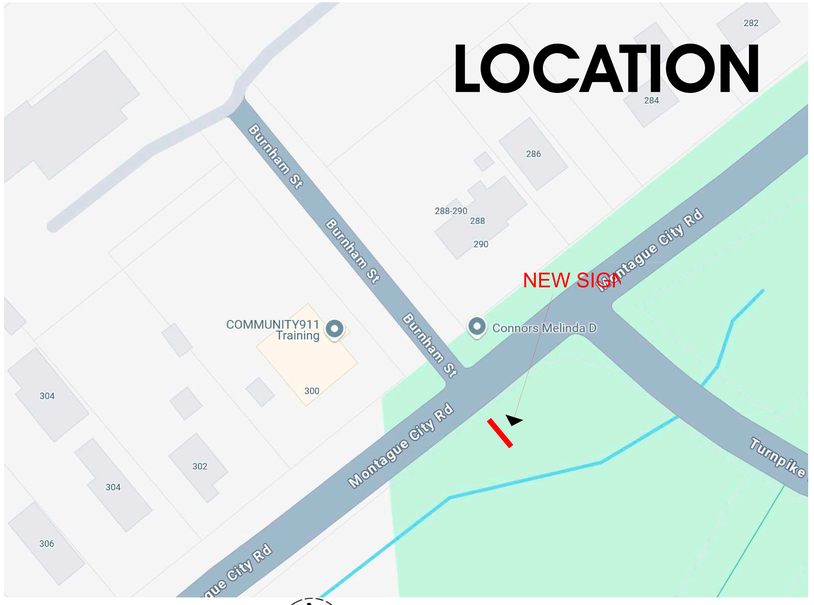

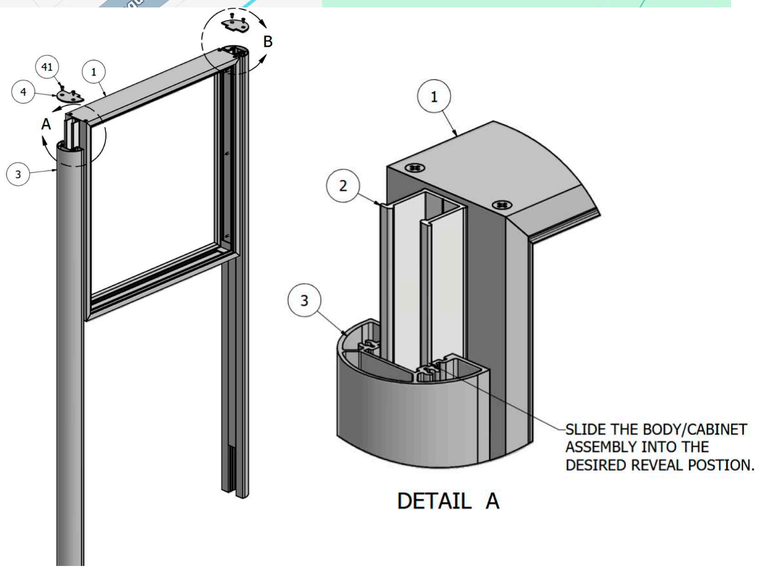

Authorized Signature: _____ Print Name: _____ Date: _____

ADD-A-SIGN SIGNS 1·978·466·9000

ADD-A-SIGN LLC
136 Pond Street
Leominster, MA 01453
978.466.9000 Fax: 978.537.0095
www.addasign.com

Scope of Work:
Install a 9' Wide X 3' Tall X 3.5" Deep Fabricated Sign Cabinet with Aluminum posts via direct burial with 4,000Lb test Cement.

Artwork Disclaimer: Due to the nature of the printing process, the colors represented in this proof are approximate and should be used solely for proofing purposes only. If actual colors or PMS colors are listed, it is recommended that you refer to a Pantone color guide for actual colors. All scales are approximate unless measurements are specifically shown. By signing this proof indicates that you approve of the colors and sizes and have verified such.

This design is the exclusive property of ADD-A-SIGN Co.. All rights reserved. Reproduction of this property without permission will be subject to the user liability under the copyright statutes of the United States.

Alta Equipment Company
Frank W Rhoades

1401 Hooksett Road
Hooksett NH 03106 US
(603-644-8787 x250)
(603-759-4218 Mobile)

Quotation

ADDRESS	SHIP TO
Town of Montague Mass-DPW Will Statfford-Foreman 128 Turner Falls Road Turner Falls/Montague MA 01376	Town of Montague Mass-DPW Will Statfford-Foreman 128 Turner Falls Road Turner Falls/Montague MA 01376

QUOTATION#	DATE	EXPERATION DATE
LBTT012125WS	01-21-2025	02-28-2025

LeeBoy Tack Tank Description Sourcewell Contract # 060122-VTL		RATE	AMOUNT
LEEBOY L300T 6HP HATZ DIESEL ELECTRIC START-DIESEL BURNER W/AUTO IGNITION BURNER WITH OUTFIRE PROTECTION-REQUIRES ELECTRIC START ENGINE 12FT SPRAY BAR WITH CAB CONTROLS-INCLUDES WIRELESS REMOTE 40FT REEL-6FTWAND			**$30,000.00**
		TOTAL:	**$30,000.00**

Alta Equipment Company

Alta Equipment Company

Alta Equipment Company

L300 Tack Tank

Perfect for the all-inclusive commercial paving contractor, the L300 Tack Distributor provides a perfectly sized tank for small to large projects including parking lots, patching, driveways or soil stabilization. Daily task can be completed with ease by relying on the trouble-free gas powered engine and the proven reliable user-friendly design. Uniquely configurable, the customizable options give the contractor the ability to create a solution specific to their exact needs.

Performance Features:

- 300 Gallon Capacity Tank
- 4.8 hp (3.6 kw) Gas Engine
- 6' Wand with On/Off Valve
- 40' Heavy-Duty Recoil Hose Reel
- 4,210 lbs Loaded Weight
- 1" Rear Tank Sampling Valve
- One 300,000 BTU Propane Burner
- Trailer-Mounted or Skid-Mounted Configurations
- Electric brakes
- Emergency Brake-Away System
- Optional Accessories Available

L300 Tack Distributor Specifications

Tank Size	300 gallons
Dimensions (Trailer Configuration)	- Length: 12' 1" - Width: 6' 4" - Height: 5' 9" - Shipping Weight: 1,760 lbs
Dimensions (Skid Configuration)	- Length: 8' 10" - Width: 4' 3" - Height: 4' 9"
Engine	Gas Engine– 4.8 hp (3.6 kw)
Capacities	- Fuel: 1 gallon
Tank Dimensions	- Length: 52" - Width: 54.125" - Height: 36.25"
Asphalt Pump	- Specially designed 7 gallons per minute pump
Heat System	- One 300,000 BTU propane burner - One start burner - 40 lbs propane fuel tank
Temperature Gauge	- 50 - 300º F (10 - 149º C) - Adjustable angle faceplate
Flush Tank	- 7 gallons tank with reverse suction valve
Hose and Reel	- .5" x 40' heavy-duty recoil hose reel
Wand	- 6' wand with cold handles - On/off valve - Removable spray tip
Manhole	- 20" diameter - 10" diameter fill hole - 3 psi pressure relief

Clean Out	- 4"
Sampling Valve	- 1"
Additonal Standard Equipment	- Waste bucket mount (trailer only) - 1" rear tank return - 2" in-tank overflow
Optional Equipment	Engines - Gas engine - 4.8 hp (3.6 kw) electric start - Hatz diesel - 7.2 hp (5.4 kw) electric start - Gas engine - 12hp (9 kw) electric start - Fuel: 1.32 gallons Heat Systems - Diesel Burner One 300,000 BTU diesel burner (only available with electric start engines) 7 gallon fuel tank Auto ignition diesel burner with outfire - Overnight Heat 120 volt/1500 watt Immersion element Spraybar with 12' pattern - Spraybar controls: In-truck wireless remote controls (requires spray bar option) - Spraybar with cab wireless controls - Spraybar lift with cab wireless controls - Spraybar with cab wireless controls and lift with cab wireless controls Insulated Tank Surge brakes in lieu of electric brakes Frame mounted tool box Wheel chocks Fire extinguisher: 5lbs 2 5/16" ball hitch

ST Engineering LeeBoy, Inc. ▪ 500 Lincoln County Parkway Extension ▪ Lincolnton, NC 28092 ▪ 704.966.3300
www.LeeBoy.com

LeeBoy and the LeeBoy logo are registered trademarks of ST Engineering LeeBoy, Inc. Equipment model names, slogans and subsidiary logos appearing in this collateral may be registered trademarks or the trademarks of ST Engineering LeeBoy, Inc. The technical data contained herein is subject to change due to continuous engineering and development. Accordingly, LeeBoy reserves the right to modify at any time. © 2020 ST Engineering LeeBoy, Inc. All rights reserved. BR-4004.7-EN

7A

Outlook

FY26 Rates

From Cindy Graves <cindys@hcgit.org>

Date Wed 1/29/2025 2:21 PM

To Athol, Cathy Levreault <treasurer@townofathol.org>; Athol, Patrick McIntyre <tcollector@townofathol.org>; Athol, Shaun Suhoski <ssuhoski@townofathol.org>; Belchertown Water Dist, Jane Wolfe <jane@belchertownwaterdistrict.org>; Belchertown, HR Benefits <benefits@belchertown.org>; Belchertown, Joanne Misiaszek <jmisiaszek@belchertown.org>; Charlton, Ashley Obrzut <ashley.obrzut@townofcharlton.net>; Charlton, Lisa Choiniere <lisa.choiniere@townofcharlton.net>; Charlton, Lynn Dyer <lynn.dyer@townofcharlton.net>; Chester, Don Humason <townadministrator@townofchester.net>; Chester, Sara Hunter <sara@massmunifin.com>; Chesterfield, Meg McWherter <meg.mcwherter1@verizon.net>; Cummington, Allan Kidston <treasurer@cummington-ma.gov>; Dudley, Danielle Glowacki <collector1@dudleyma.gov>; Dudley, James Robertson <treas2@dudleyma.gov>; Dudley, Rich Carmignani Jr <treas1@dudleyma.gov>; Gateway Regional SD, Deborah Kuhn <dkuhn@grsd.org>; Goshen, Allan Kidston <treasurer@goshen-ma.us>; Goshen, Wayne Glaser <wayneglaser@verizon.net>; Granby Schools, Mary Houle <mhoule@granbyschoolsma.net>

1 attachment (15 KB)

2026rates.docx;

To All Units,

Attached you will find the FY2026 premium rates for the health insurance (effective 7/1/25) which reflect today's vote of an 18% increase to the HMO plan and a 20% increase to the PPO plans.

You'll also find a link below to an article regarding Berkshire Health's rate increase. You'll see similarities in the struggle to balance rate increases against the trend in rising claims while maintaining reserves. We are not alone in this battle – it is everywhere.
https://www.iberkshires.com/story/77864/Berkshire-Health-Group-Sets-16-Health-Insurance-Hike-for-FY26.html

Thanks,
Cindy

From: Cindy Graves
Sent: Tuesday, January 28, 2025 12:37 PM
Subject: RE: IAC Mtg 1/29/25 at 10:00am

Hi again,

I forgot to include the attached article from the Boston Globe regarding the surge in GLP1 (weight loss drugs) usage in Massachusetts.

General Category: Miscellaneous

EMPLOYEE BENEFITS **Dept # 910**

EXPENDITURES		Budget FY24	Actual FY24	Budget FY25	Expended thru 12/31/2024	FY26 Level Services Request	FY26 BOS Recommend	FY26 BOS & Fin Comm Recommend
5170	Non-Contrib Retirement	2,045	2,726	2,045		2,045		
5171	Retirement	1,095,624	1,095,624	1,155,361	1,155,361.00	1,181,739		
5172	Workers' Compensation	44,000	33,352	44,000	41,339.00	44,000		
5173	Unemployment Compensation	10,000	1,660	10,000	7,470.00	10,000		
5174	Health Insurance	1,246,000	1,116,656	1,350,000	643,782.21	1,593,000		
5175	Life Insurance	17,665	13,642	17,665	7,106.68	17,665		
5177	Medicare	75,000	72,007	78,012	40,527.39	78,598		
5179	Ret HIns Other Towns							
	TOTAL PERSONAL SERVICES	2,490,334	2,335,667	2,657,083	1,895,586.28	2,927,047	-	-
	TOTAL EMPLOYEE BENEFITS	2,490,334	2,335,667	2,657,083	1,895,586.28	2,927,047	2,927,047	2,927,047
					Change	**269,964**	**10.16%**	

		Budget FY25	Request FY26	$ Change	% Change	Explanation
5170	Non-Contrib Retirement	2,045	2,045	-		
5171	Retirement	1,155,361	1,181,739	26,378	2.28%	
5172	Workers' Compensation	44,000	44,000	-		
5173	Unemployment Compensation	10,000	10,000	-		
5174	Health Insurance	1,350,000	1,593,000	243,000	18.00%	18% increase with room for plan changes
5175	Life Insurance	17,665	17,665	-		
5177	Medicare	78,012	78,598	586	0.75%	

TOC	FY2026 BUDGET SUMMARY	FY24 Budget	FY25 Budget	FY26 Requested Level Services	Source Taxation	Free Cash	Available Funds
	29,993,153						
	updated since FY23 budget file						
	SOURCES						
	NET LEVY	21,596,879	22,222,502	23,138,216	23,138,216		
	STATE AID (NET OF CHARGES)	1,914,986	2,085,265	2,202,926	2,202,926		
	LOCAL RECEIPTS	1,943,490	1,859,096	1,930,969	1,930,969		
	FREE CASH	-	-	-		-	
	OTHER AVAILABLE FUNDS		-				
	Sp Article Balances	12,099	-	-			-
	Transportation Infrastructure RRA	7	-	-			-
	Reserve for Excluded Debt		487	-			-
	Overlay Surplus		-				-
	Colle Receipts Reserved for Appropriation	53,250	52,250	52,250			52,250
	Sale of Real Estate		26,041	23,372			23,372
	FREE CASH FOR SPECIAL ARTICLES	2,180,701	314,000	30,000		30,000	
	TOWN CAPITAL STABILIZATION	100,000	228,500	-			
	TOWN STABILIZATION	-	-	-			
	FCTS STABILIZATION	-	-	-			
	GMRSD STABILIZATION	-	-	-			
	CWF CAPITAL STABILIZATION	-	-	-			
	CANNABIS IMPACT STABILIZATION	-	-	-			-
	BORROWING IN ANTICIPATION OF GRANTS		-				
	TOWN BORROWING	-	836,500	-			
	CWF BORROWING	-	283,800	-			
	CWF RETAINED EARNINGS	352,364	-	-			
	CWF USER FEES	2,719,224	2,759,825	2,814,482			
	AIRPORT USER FEES	426,965	286,043	302,964			
	TOTAL ESTIMATED SOURCES	31,299,965	30,954,309	30,495,179	27,272,111	30,000	75,622
	GENERAL FUND SOURCES - NET OF BORROWING, TFHS DEBT BALANCE, CWF, AIRPORT, COLLE			27,325,483			

		FY24 Budget	FY25 Budget	FY26 Requested
	GENERAL GOVERNMENT			
113	TOWN MEETING	2,980	3,180	3,180
122	SELECTBOARD	330,581	326,230	324,662
131	FINANCE COMMITTEE	2,000	600	600
132	RESERVE FUND	50,000	50,000	50,000
135	TOWN ACCOUNTANT	90,500	93,000	95,044
141	ASSESSORS	189,801	186,059	180,122
145	TREASURER/COLLECTOR	231,048	206,965	208,335
151	TOWN COUNSEL	80,000	87,475	82,475
155	INFORMATION TECHNOLOGY	80,500	92,252	103,352
159	SHARED COSTS	85,907	93,499	112,430
161	TOWN CLERK	243,041	237,224	219,144
175	PLANNING	134,429	140,788	142,394
176	ZONING BOARD OF APPEALS	700	700	700
190	PUBLIC BLDG UTILITIES	155,932	140,050	145,000
197	FARMERS MARKET	1,000	5,200	5,700
	TOTAL GENERAL GOVERNMENT	1,678,419	1,663,222	1,673,138
	PUBLIC SAFETY			
211	POLICE	1,970,054	2,067,608	2,062,965
211	POLICE CRUISER	68,100	60,000	-
212	DISPATCH	395,588	410,768	410,868
241	BUILDING INSPECTOR	148,621	155,082	149,926
244	SEALER OF WEIGHTS	7,182	7,182	7,182
291	EMERGENCY MANAGEMENT	6,265	6,944	6,944
292	ANIMAL CONTROL	23,112	23,658	23,858
294	FOREST WARDEN	1,710	1,882	1,882
299	TREE WARDEN	30,285	30,474	30,474
	TOTAL PUBLIC SAFETY	2,650,917	2,763,598	2,694,099
	PUBLIC WORKS			
420	DEPT OF PUBLIC WORKS	1,747,506	1,772,006	1,823,964
	DPW CAPITAL LEASE	-	-	-
423	SNOW & ICE	311,250	321,250	324,750
433	SOLID WASTE	679,221	802,776	835,300
480	CHARGING STATIONS	7,380	11,980	11,980
491	CEMETERIES	30,150	32,150	32,150
	TOTAL PUBLIC WORKS	2,775,507	2,940,162	3,028,144
	HUMAN SERVICES			
511	BOARD OF HEALTH	175,444	168,004	172,144
541	COUNCIL ON AGING	58,593	59,272	77,207
543	VETERANS' SERVICES	76,500	77,897	101,000
	TOTAL HUMAN SERVICES	310,537	305,173	350,351
	CULTURE & RECREATION			
610	LIBRARIES	503,336	518,233	549,735
630	PARKS & RECREATION	160,703	164,826	169,326
691	HISTORICAL COMMISSION	500	500	500
693	WAR MEMORIALS	1,600	1,600	1,600
	TOTAL CULTURE & RECREATION	666,139	685,159	721,161
	DEBT SERVICE			
700	DEBT SERVICE	1,154,319	1,158,857	1,160,025
	INTERGOVERNMENTAL			
840	INTERGOVERNMENTAL	113,924	116,874	119,041
	MISCELLANEOUS			
910	EMPLOYEE BENEFITS	2,490,334	2,657,083	2,927,047
946	GENERAL INSURANCE	120,600	119,600	119,600
	TOTAL MISCELLANEOUS	2,610,934	2,776,683	3,046,647
	GRAND TOTAL GENERAL FUND	11,960,696	12,409,728	12,792,606
	GF Change	10.5%	3.8%	3.1%
	CLEAN WATER FACILITY			
440	CLEAN WATER FACILITY	2,015,729	2,116,590	2,208,809
	CWF CAPITAL OUTLAY	58,500	58,500	58,500

12,792,606		-

TOC	FY2026 BUDGET SUMMARY	29,993,153	FY24 Budget	FY25 Budget	FY26 Requested Level Services	Source Taxation	Free Cash	Available Funds
	updated since FY23 budget file							
449	DPW SUBSIDIARY		84,650	85,150	85,150			
700	CWF DEBT		483,614	478,365	485,028			
910	CWF EMPLOYEE BENEFITS		363,631	380,719	383,183			
	TOTAL CWF		3,006,124	3,119,324	3,220,670	406,188		
482	AIRPORT		284,915	255,238	271,625	99,396		23,372
700	AIRPORT DEBT		101,535	102,775	99,935			
910	AIRPORT EMPLOYEE BENEFITS		40,515	61,664	54,172			
	TOTAL AIRPORT		426,965	419,677	425,732	99,396		23,372
300	EDUCATION							
	FCTS		1,053,018	837,356	917,650	917,650		-
	GMRSD		11,809,191	12,143,442	12,636,495	12,636,495		
	TOTAL EDUCATION		12,862,209	12,980,798	13,554,145	13,554,145	-	-
	RAISE DEBT SERVICE DEFICIT					-		
	GRAND TOTAL		28,255,994	28,929,527	29,993,153	26,852,335	-	23,372
	PLUS SPECIAL ARTICLES/NEW REQUESTS		FY24	FY25	FY26			
	Policy: Taxation transfer to FCTS Stabilization							
	SPECIAL ARTICLES							
	Operating Appropriation to OPEB		50,000	50,000	50,000	50,000		
	Add'l Appropriation to OPEB						-	
	Operating Appropriation to CI Stab		47,099	46,761	49,664	49,664		
	Operating Appropriation to Town Gen Stab		37,388	-	74,496	74,496		
	Add'l Approp to Town GSF to meet minimum			-	(47,148)	(47,148)		
	Add'l Approp to FCTS Stab per policy		21,940	-		-		
	50% Kearsarge Lease - 48.5 % to GM Stab		41,339	34,323	38,718	38,718		
	50% Kearsarge Lease - 51.5 % to Town Cap Stab		43,896	36,446	41,113	41,113		
	50% Kearsarge Lease - 51.5 % to Town Cap Stab		43,896	36,446	41,113	41,113		
	Add'l to Town Cap Stab						-	
	Add to CWF Captial Stabilization Fund							
	Add to Conservation Fund		10,000	10,000	10,000	10,000		
	Smith VoTech Tuition and Transportation			36,000	59,000	59,000		
	DPW Discretionary based on balance end of March		70,592	64,218	40,000	40,000		
	Network Equipment				20,000		20,000	
	Library Accessibility/Upgrades				10,000		10,000	
	Colle RRA		53,250	52,250	52,250			52,250
	Add'l amts for Pay & Class Implementation							
	Overlay Surplus to OPEB		250,000	-				
	Free Cash to Reserves		2,000,000	-			-	
	Total Special Articles		3,298,085	2,069,646	439,206	356,956	30,000	52,250
	TOTAL ESTIMATED USES		31,554,079	30,999,173	30,432,359	27,209,291	30,000	75,622
	SUMMARY							
	TOTAL ESTIMATED SOURCES		31,299,965	30,954,309	30,495,179	27,272,111	30,000	75,622
	TOTAL ESTIMATED USES		(31,554,079)	(30,999,173)	(30,432,359)	(27,209,291)	(30,000)	(75,622)
	ESTIMATED SHORTFALL/SURPLUS		(254,114)	(44,864)	62,820	**62,820**	-	-

Current Balances

Notes:

ot yet account for union contracts/ pay and class i

Schedule III
Town Operating Budget

DEPT NO.		BUDGET FY24	BUDGET FY25	REQUEST FY26	$ Increase	% Increase	main reason for change
	GENERAL GOVERNMENT						
113	TOWN MEETING	2,980	3,180	3,180	-	0.00%	
122	SELECTBOARD	330,581	326,230	324,662	(1,568)	-0.48%	
131	FINANCE COMMITTEE	2,000	600	600	-	0.00%	
132	RESERVE FUND	50,000	50,000	50,000	-	0.00%	
135	TOWN ACCOUNTANT	90,500	93,000	95,044	2,044	2.20%	Financial mgmt software change
141	ASSESSORS	189,801	186,059	180,122	(5,937)	-3.19%	
145	TREASURER/COLLECTOR	231,048	206,965	208,335	1,370	0.66%	Change from elected to appointed
151	TOWN COUNSEL	80,000	87,475	82,475	(5,000)	-5.72%	
155	INFORMATION TECHNOLOGY	80,500	92,252	103,352	11,100	12.03%	IT consultant cost increase
159	SHARED COSTS	85,907	93,499	112,430	18,931	20.25%	new payroll services sofware
161	TOWN CLERK	243,041	237,224	219,144	(18,080)	-7.62%	3 elections in FY25, 1 in FY26
175	PLANNING	134,429	140,788	142,394	1,606	1.14%	
176	ZONING BOARD OF APPEALS	700	700	700	-	0.00%	
190	PUBLIC BLDG UTILITIES	155,932	140,050	145,000	4,950	3.53%	3% predicted increase
197	FARMERS MARKET	1,000	5,200	5,700	500	9.62%	
	TOTAL GENERAL GOVT	1,678,419	1,663,222	1,673,138	9,916	0.60%	
	PUBLIC SAFETY						
211	POLICE	1,970,054	2,067,608	2,062,965	(4,643)	-0.22%	
211	POLICE CRUISER	68,100	60,000	-	(60,000)	-100.00%	no cruiser replacement this year
212	DISPATCH	395,588	410,768	410,868	100	0.02%	
241	BUILDING INSPECTOR	148,621	155,082	149,926	(5,156)	-3.32%	
244	SEALER OF WEIGHTS	7,182	7,182	7,182	-	0.00%	
291	EMERGENCY MANAGEMENT	6,265	6,944	6,944	-	0.00%	
292	ANIMAL CONTROL	23,112	23,658	23,858	200	0.85%	
294	FOREST WARDEN	1,710	1,882	1,882	-	0.00%	
299	TREE WARDEN	30,285	30,474	30,474	-	0.00%	
	TOTAL PUBLIC SAFETY	2,650,917	2,763,598	2,694,099	43,182	1.56%	
	PUBLIC WORKS						
420	DEPT OF PUBLIC WORKS	1,747,506	1,772,006	1,823,964	51,959	2.93%	Wages/FRCOG bid/Ave A planters
423	SNOW & ICE	311,250	321,250	324,750	3,500	1.09%	
433	SOLID WASTE	679,221	802,776	835,300	32,524	4.05%	Casella contract increases
480	CHARGING STATIONS	7,380	11,980	11,980	-	0.00%	
491	CEMETERIES	30,150	32,150	32,150	-	0.00%	
	TOTAL PUBLIC WORKS	2,815,507	2,940,162	3,028,144	212,637	7.23%	
	HUMAN SERVICES						
511	BOARD OF HEALTH	175,444	168,004	172,144	(3,300)	-1.96%	

Schedule III
Town Operating Budget

DEPT NO.		BUDGET FY24	BUDGET FY25	REQUEST FY26	$ Increase	% Increase	
	HUMAN SERVICES						
541	COUNCIL ON AGING	58,593	59,272	77,207	17,935	30.26%	Proposed Admin Assistant Position
543	VETERANS' SERVICES	76,500	77,897	101,000	23,103	29.66%	Predicted increase in VA benefits
	TOTAL HUMAN SERVICES	310,537	305,173	350,351	39,814	13.05%	
	CULTURE & RECREATION						
610	LIBRARIES	503,336	518,233	549,735	31,502	6.08%	Proposed Position shift and hour increases
630	PARKS & RECREATION	160,703	164,826	169,326	4,500	2.73%	Maintenance of lights and Montague Center park
691	HISTORICAL COMMISSION	500	500	500	-	0.00%	
693	WAR MEMORIALS	1,600	1,600	1,600	-	0.00%	
	TOTAL CULTURE/RECREATION	666,139	685,159	721,161	36,002	5.25%	
	DEBT SERVICE						
700	DEBT SERVICE	1,154,319	1,158,857	1,160,025	1,168	0.10%	
	INTERGOVERNMENTAL						
840	INTERGOVERNMENTAL	113,924	116,874	119,041	2,167	1.85%	

	MISCELLANEOUS						
910	EMPLOYEE BENEFITS	2,490,334	2,657,083	2,927,047	269,964	10.16%	2.2% Retirement/18% health insurance prediction
946	GENERAL INSURANCE	120,600	119,600	119,600	-	0.00%	
	TOTAL MISCELLANEOUS	2,610,934	2,776,683	3,046,647	269,964	9.72%	
	TOTAL TOWN BUDGET	**12,000,696**	**12,409,728**	**12,792,606**	**382,878**	**3.09%**	

Schedule IV
Clean Water Facility Budget

DEPT NO.		BUDGET FY24	BUDGET FY25	REQUEST FY26	$ Increase	% Incr	
	CLEAN WATER FACILITY						
440	Wages & Expenses	2,015,729	2,116,590	2,208,809	92,219	4.36%	MF Overage Charge, water bills from new meter
440	Capital Outlay	58,500	58,500	58,500	-	0.00%	
700	Debt Service	483,614	478,365	485,028	6,663	1.39%	
910	Employee Benefits	363,631	380,719	383,183	2,464	0.65%	
	SUBTOTAL CWF	2,921,474	3,034,174	3,135,520	101,346	3.34%	
449	**DPW SUBSIDIARY**						
	Wages & Expenses	84,650	85,150	85,150	-	0.00%	
	SUBTOTAL DPW SUBSIDIARY	84,650	85,150	85,150	-	0.00%	
	TOTAL CWF	3,006,124	3,119,324	3,220,670	101,346	3.25%	

Schedule V
Airport Budget

DEPT NO.		BUDGET FY24	BUDGET FY25	REQUEST FY26	$ Increase	% Increase	
	AIRPORT						
482	Wages & Expenses	274,915	255,238	271,625	16,387	6.42%	Airport Manager salary
482	Capital Outlay/Local Share	10,000	-	-	-		
700	Debt Service	101,535	102,775	99,935	(2,840)	-2.76%	
910	Employee Benefits	40,515	61,664	54,172	(7,492)	-12.15%	Retirement and health insurance
	TOTAL AIRPORT	426,965	419,677	425,732	6,055	1.44%	

VOLTREK
POWERING YOUR JOURNEY℠

DATE: 01 / 29 / 2025
QUOTE # 00001995

Created by:

Ellen Ruddy
Manager of Customer Success
280 Merrimack St. SE 554
Lawrence, MA 01843
(978) 529-3901
eruddy@voltrek.com

Prepared for:

Chris Nolan
Assistant Town Administrator
Town of Montague
1 Avenue A Turners Falls Massachusetts
RE: Town of Montague Network & Assure Renewal 2025 5yrs.
Town of Montague ORG ID: ORG20219

Voltrek is an Orion Energy Systems Company, specializing in planning, installing, and servicing commercial charging station projects. We have been in business for 14 years and offer a full scope of turnkey services to meet your EV Charger needs. Voltrek is on the Commonwealth of Massachusetts OSD contract VEH102.

Scope

Voltrek is pleased to provide the following quote to renew current subscriptions that will expire on 2/12/2025. Current Station and EXP details are listed in the table below. This 5-year renewal will make your new expiration date 2/12/2030 for both Network Services and Assure on your 2 stations.

Station list and Warranty Exp Dates

Display Name	Model	Location	# of Ports	Station S/N	Network EXP	Assure EXP
MONTAGUE / SECOND ST	CT4020	34 2nd St	2	233041160193	2/12/25	2/12/25
MONTAGUE / SIXTH ST	CT4020	33 6 St	2	230741029545	2/12/25	2/12/25

Item	Price	Qty.	Subtotal
CPCLD-COMMERCIAL-REN-5 5 yr Prepaid Renewal of Commercial Cloud Plan subscription with all existing station management features. Pricing is Per Port	$1,640.00	4	$6,560.00
CT4000-ASSURE-REN-5 5 yr Prepaid Renewal of ChargePoint Assure for CT4000 stations. Includes Parts and Labor Warranty. Pricing is per station.	$2,400.00	2	$4,800.00

Subtotal	**$11,360.00**
Taxes to be Calculated Upon Invoice	**$0.00**
Total	**$11,360.00**

Terms

1. Absolute Total of this renewal is Network Term + Assure Term
2. All invoices are: Net 30 days or prepaid.
3. Prices do not include tax where applicable.
4. Purchaser confirms that the shipping and billing information provided in the Quotation is accurate for Voltrek's shipping and invoicing purposes.
5. Customer to be invoiced at time of shipment.
6. Quote is valid for 90 days.

NAME: **DATE:**

SIGNATURE:

Thank you for your business

Sincerely,

Ellen Ruddy
Manager of Customer Success
280 Merrimack St. SE 554
Lawrence, MA 01843
(978) 529-3901
eruddy@voltrek.com

NEW Invoice and Payment Remittance Address:
Orion Energy Systems, Inc.
DBA Voltrek
Attn: Credit Department (for payments)
Attn: AP (for Invoices)
2210 Woodland Drive Manitowoc, WI 54220

Billing Info:

Billing Contact Name (This can be a person or a billing department):

Walter Ramsey

Billing Email:

assistant.townadmin@montague-ma.gov

Billing Phone:

(413) 863-3200

Bill to Address:

Town of Montague

1 Avenue A

Turners Falls

Massachusetts

01376

Will you be issuing a PO?

Do you have special Billing Instructions? (EX: upload to a third party system etc.)?

Are you Tax Exempt

I have verified the above information is correct?

ON-STREET EV CHARGING PROGRAM

8B

AVAILABLE FOR MA MUNICIPALITIES

We are thrilled to announce that the Massachusetts Clean Energy Center (MassCEC) has awarded **Commonwealth Electrical Technologies** a contract for the **On-Street Charging Solutions Program.** We will be partnering with several regional firms including Leidos to provide these services for municipalities across Massachusetts.

ABOUT THE PROGRAM

The Program aims to promote wide-scale EV adoption across the Commonwealth by increasing access to curbside EV charging infrastructure in MA communities, with an emphasis on Low Income/Disadvantaged Communities (LIDAC). The Program will also pilot innovative On-Street Charging technologies, models, and ownership structures.

THE OFFER

- 15 municipalities will receive **EV chargers and infrastructure** at approximately three on-street parking locations, **at no cost.**
- 25 municipalities will receive **EV charging planning support** and feasibility studies, also **at no cost.**

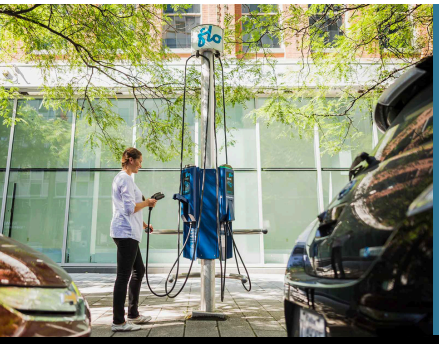

We are actively ***seeking municipalities*** who meet the following criteria to participate in this exciting program:

- High percentage of renters
- Available on-street parking near multifamily residential housing
- Contains LIDAC communities

If interested in learning more, please **send an email** to EVcharging@comelectrical.com to schedule an introductory video call.

COMMONWEALTH ELECTRICAL TECHNOLOGIES

MASSACHUSETTS CLEAN ENERGY CENTER®

leidos

Town of Montague

REQUEST FOR PROPOSALS
FOR
Lease of Property

Colle Building
Located at
85 Avenue A, Turners Falls, Massachusetts

Issued: February 5, 2025

Responses Due: March 12, 2025

Table of Contents

I. Introduction **1**
II. Location and Setting ..... Error! Bookmark not defined.
III. Town's Objectives **1**
IV. Description of the Premises **2**
V. Terms, Conditions, and Proposed Use ..... Error! Bookmark not defined.
VI. Proposal Submittal Requirements ..... Error! Bookmark not defined.
VII. Evaluation Criteria ..... Error! Bookmark not defined.
A. Minimum Threshold Criteria ..... **Error! Bookmark not defined.**
B. Comparative Criteria ..... **Error! Bookmark not defined.**
C. Overall Rating ..... **Error! Bookmark not defined.**
VIII. Proposal Process and Schedule of Events ..... Error! Bookmark not defined.
Optional Briefing, Site Visit ..... **Error! Bookmark not defined.**
Questions about the RFP ..... **Error! Bookmark not defined.**
Communication with the Town ..... **Error! Bookmark not defined.**
Summary of RFP Schedule ..... **Error! Bookmark not defined.**
IX. Submittal Requirements ..... Error! Bookmark not defined.
X. Selection Process; Agreements Entered into with Manager ..... Error! Bookmark not defined.
XI. List of Required Forms **3**

REQUEST FOR PROPOSALS

Lease of Colle Building

Proposals Due: Wednesday, March 12, 2025

I. Introduction

The Town of Montague, acting through the Town Administrator on behalf of the Selectboard, hereby requests proposals to lease the entirety of the building known as the Colle Building (the "Premises"). The complete RFP may be obtained at the office of the Assistant Town Administrator, Montague Town Hall, 1 Avenue A, Turners Falls, MA 01376, or by emailing chrisn@montague-ma.gov or downloading via the Town's website www.montague-ma.gov.

The applicable terms, conditions, and restrictions are more fully set forth below. For purposes of this Request for Proposals (RFP), the proposer that is ultimately awarded a lease shall hereinafter be called the "Lessee."

The purpose of this RFP is to facilitate the selection of a Lessee who demonstrates the qualifications and capacity, as determined through the application of the Evaluation Criteria set forth herein, that are necessary to properly provide stewardship, management, and maintenance of the leased Premises in a manner consistent with the objectives, terms, and conditions set forth herein.

The Town and the Selectboard believe that the information provided in this RFP is accurate. The Town makes no representation or warranty, express or implied, as to the accuracy and completeness of the description of or information about the Premises. The Town and Selectboard assume no liability for the inaccuracy or incompleteness of the information. By submitting a proposal, the proposer assumes all risk in connection with the use of the information and releases the Town and Selectboard from any liability in connection with the use of the information by the proposer.

The Town and the Selectboard make no representation or warranty, expressed or implied, with respect to the Premises, including without limitation, the value, quality, or character of the Premises; or its fitness or suitability for any particular use and/or the physical and environmental condition of the Premises. The Premises will be made available to the successful proposer in its "as is" condition.

II. Town's Objectives

The Town is issuing this RFP pursuant to the statutory authority granted under MGL c.40, sec. 3 authorizing the Selectboard to lease property under its jurisdiction.

The Selectboard requests proposals from interested parties, with statements of qualifications, to operate and manage the Premises in accordance with objectives and restrictions specified herein. The primary goal of the Selectboard is for the Premises to be used in a manner which promotes the community and is consistent with neighborhood character and characteristics. The Town will maintain ownership of the Premises and the advantages for grant making and other funding this enables.

The selected proposer must be a documented not-for-profit entity recognized by the Commonwealth of Massachusetts and/or under the Internal Revenue Code. Proposers should be aware of current zoning limitations. The preferred selection criteria include:

- Demonstrated ability of proposer to provide stewardship and basic maintenance of the Premises
- Agreement to lease term of three (3) years

The Town directs respondents to the required submittal elements and the comparative rating criteria on pages 7-9 for further detail.

Note that the successful respondent shall enter into a lease in a form similar to the example shown beginning on page 10 of this RFP noted as **Exhibit "A."**

III. Description of the Premises

The Premises includes approximately 13,000 square feet of interior building space located at 85 Avenue A, Turners Falls, Massachusetts, with the Town of Montague retaining its right to access and use for its own purposes the existing so-called Building Maintenance Office in the building basement. In addition, the Leased Premises shall include the nonexclusive right of the Lessee, its employees, agents, and customers to park in the 40 spaces in the Colle Parking Lot during the hours of 7:00 A.M. to 9:00 P.M. on business days. Presently the property is licensed for temporary use and occupancy in favor of the Center for Responsive Schools, Inc., a non-profit educational development organization and publishing house. Nothing herein shall prevent the current occupant from responding to this RFP.

Environmental Conditions / No Warranty

The property is being leased in "as is" condition. The Town makes no representations or warranty as to the environmental conditions, including, but not limited to, any hazardous materials, the condition of the property, or its general environs.

The successful proposer shall acknowledge that no such representation or warranty has been made, and the property will be leased in "as is" condition without recourse to, or remedy from, the Town for any condition, liability, or event connected to the property.

The Town hereby gives notice that it will not be bound by any statement, representation, or information pertaining to the property or its condition by any employee, agent, elected or appointed official, or any other person or persons acting, or purporting to act, under color of authority of the Town of Montague.

Zoning

The current zoning for the property is Central Business (CB) under the Town of Montague's Zoning Bylaw available at www.montague-ma.gov. Any use inconsistent with the Zoning Bylaw will require a variance from the Zoning Board of Appeals, or a zone change approved by Town Meeting. Specific uses may require special permits, site plan approval, or other approvals from the Planning Board, Board of Health, or other Town bodies.

The Town makes no representations or guaranties regarding the applicant's success in obtaining such approvals, variances, or permits. Uses inconsistent with zoning will be prohibited within the lease agreement with the Town.

IV. Proposal and Selection Process

General Conditions

The Town of Montague, in its sole and absolute discretion, with or without cause, and without liability to the Town or any agent of the Town, reserves the right to:

- Accept or reject any or all proposals, either in whole or part, waive any portion or requirement of this RFP, cancel this RFP at any time, and/or take any action the Town, in its sole discretion, believes to be in its best interest. The Town shall take action upon the RFP within sixty (60) days

after the opening of proposals.

- Retain all proposals as official documents as the sole property of the Town of Montague, and to use them in whatever manner it deems appropriate.
- Allow or refuse any request by any proposer to correct errors or omissions in any proposal after the deadline for submission.
- Investigate the financial capability, integrity, experience and quality of performance of any proposer including major stockholders or principals.
- Request an oral presentation from any proposer.
- Request any additional information from any proposer.
- Pre-award negotiations may be conducted with the selected proposer.
- The selected proposer shall be required to comply with all applicable federal, state, and local laws.
- The selected proposer shall provide a certificate of insurance evidencing comprehensive public liability insurance on the Premises with property damage insurance in limits of $500,000 / $1,000,000 from a responsible company qualified to do business in Massachusetts and naming the Town of Montague as an additional insured.
- The selection of the successful proposal shall be made without regard to race, color, sex, age, religion, political affiliation and/or national origin. EOE/AA.

List of Required Forms

A. ____Certificate of Tax Compliance
B. ____Certificate of Non-Collusion
C. ____Certificate of Authority
D. ____Price Proposal (sample format; submit in separate, sealed envelope)

Note: Forms are contained within "Exhibit B" hereto.

Expenses

All proposers responding to this RFP do so at their sole expense and risk. The Town of Montague assumes no financial or other obligation to proposers that respond to this RFP or to their agents.

Non-confidentiality

All proposals shall become public records, and will be subject to disclosure under the Massachusetts Public Records Law.

Selection Process

A review committee will be appointed by the Chief Procurement Officer to review and rank complete proposals. This committee may be composed of elected or appointed public officials. The Committee may, in its sole and absolute discretion, reject any and all, or parts of any and all proposals; may re-advertise this RFP; may postpone or cancel at any time this RFP process; may change, or re-schedule the timetable of events. The Committee reserves the right to waive any minor informalities pertaining to any proposals received.

The determination of the criteria and process whereby proposals are evaluated and the decision whether or not to issue an award shall in the sole and absolute discretion of the Town of Montague. The Town has endeavored to provide accurate information in this RFP; however, it is the responsibility of the proposer to examine the property and to investigate to their satisfaction questions or any other matter relating to the property. Reasonable access will be provided to all proposers to investigate the property.

Selection Criteria

Proposals will be evaluated and ranked according to the following criteria with added weight for highly preferred outcomes outlined herein:

- Demonstrated ability of proposer to provide stewardship and basic maintenance of the Premises
- Agreement to lease term of three (3) years (required)
- Not-for-profit status with a mission compatible with the intent of this RFP (required)

Note that the Town requires and reserves the right to access and use for its own purposes the existing so-called Building Maintenance Office in the building basement.

Submission of complete proposals must be received no later than 2:00 p.m., Monday, March 10, 2025 as follows:

Town of Montague

Attn: Chris Nolan-Zeller

1 Avenue A

Turners Falls, MA 01376

Pre-submittal questions

All questions must be received in writing via email to chrisn@montague-ma.gov no later than February 24, 2025. The entity submitting the question bears all risk and responsibility to ensure that the question is actually received by the deadline. Copies of all questions, along with written answers will be provided to all known entities that have requested a copy of the RFP – and posted as an Addendum on the Web site – not later than March 3, 2025.

V. Schedule

The anticipated schedule, subject to change at the discretion of the Town, is as follows:

February 4, 2025	RFP posted on Town of Montague website www.montague-ma.gov/BIDS or by request emailed to chrisn@montague-ma.gov

February 5, 2025	RFP advertised in *Central Register*
February 13-20, 2025	RFP advertised in Montague Reporter
February 24, 2025	Deadline for questions submitted to chrisn@montague-ma.gov
March 3, 2025	Deadline for returning answers to submitted questions
March 10, 2025	Proposals due no later than 2:00 p.m.
March 10-14, 2025	Proposals reviewed by Town for potential award
March 17, 2025	Execution of lease

A. ____Certificate of Tax Compliance

CERTIFICATE OF TAX COMPLIANCE

Pursuant to M.G.L. Chapter 62C, Section 49A, I certify under the penalties of perjury that the proposer named below has complied with all laws of the Commonwealth of Massachusetts relating to taxes, reporting of employees and contractors, and withholding and remitting of child support.

_____
Social Security Number
or Federal Identification Number

_____
Corporate Name

by:_____
Signature of Individual

B. ____Certificate of Non-Collusion

CERTIFICATE OF NON-COLLUSION

The undersigned certifies under penalties of perjury that this proposal is in all respects bona fide, fair and made without collusion or fraud with any other person. As used in this certification, the word "person" shall mean any natural person, joint venture, partnership, corporation, or other business or legal entity.

_____
Signature/Title

_____
Company/Firm Name

C. ____Certificate of Authority

CERTIFICATE OF AUTHORITY
(Corporations Only)

At a duly authorized meeting of the Board of Directors of _____
(firm name)

held on _____ , it was voted, that
Date

_____ _____
Name Officer

of this company, be and hereby is authorized to submit bids and proposals, to execute contracts and bonds in the name and on behalf of said company, and affix its corporate seal thereto; and such execution of any bid, proposal, contract or obligation in this company's name on its behalf by such officer under seal of the company, shall be valid and binding upon this company.

I hereby certify that I am the Clerk of the above named corporation and that

_____ is the duly elected officer as above of said company, and that the above vote has not been amended or rescinded and remains in full force and effect as of the date of this certificate.

_____ _____
Date Clerk of Corporation

Corporate Seal

D. ____Sample Price Proposal format (separate, sealed envelope)

PRICE PROPOSAL

The undersigned Proposer submits this Price Proposal in response to the Town of Pepperell's RFP for Operation and Management of the Peter Fitzpatrick School. Proposer acknowledges that Price Proposals for the Project should be based on a management agreement in the form of a 'Triple Net' lease, and that the Proposer is responsible for all costs incurred on the Premises.

Please write your proposal offer:

Monthly Payment/Rent, for minimum period of 3 years and any longer term proposed; include any escalator provisions; use additional sheets as necessary:

_____
Print/Type your proposal amount above in written form

_____
Print/Type your proposal amount above in number form

Note: *Both the written form and the number form should indicate the same total amount. If there is a conflict between the written form and the number form amounts, the written form will control.*

Attach additional sheets to fully explain the price proposal, if necessary, but provide a definitive figure for the purpose of the Proposal evaluation.

_____
Name of Proposer

_____
Name of person signing proposal

_____
Signature of person signing proposal Date

_____
Title

_____
Address

SECTION 00550

NOTICE TO PROCEED

Owner:	Town of Montague, Massachusetts	Owner's Project No.:	n/a
Engineer:	Wright-Pierce	Engineer's Project No.:	21875
Contractor:	National Water Main Cleaning Co.	Contractor's Project No.:	
Project:	Turner Falls Sewer Manhole Rehabilitation		
Contract Name:	Turner Falls Sewer Manhole Rehabilitation		
Effective Date of Contract:	January 6, 2025		

Owner hereby notifies Contractor that the Contract Times under the above Contract will commence to run on **January 30, 2025,** pursuant to Paragraph 4.01 of the General Conditions.

On that date, Contractor shall start performing its obligations under the Contract Documents. No Work will be done at the Site prior to such date.

In accordance with the Agreement:

The date by which Substantial Completion must be achieved is **June 15, 2025,** and the date by which readiness for final payment must be achieved is **July 15, 2025**.

Before starting any Work at the Site, Contractor must comply with the following:

n/a

Owner: **Town of Montague, Massachusetts**

By *(signature)*: _____

Name *(printed)*: Richard Kuklewicz

Title: Selectboard Chair

Date Issued: _____

Copy: Engineer

END OF SECTION

EJCDC® C-550, Notice to Proceed.
Copyright© 2018 National Society of Professional Engineers, American Council of Engineering Companies, and American Society of Civil Engineers. All rights reserved.